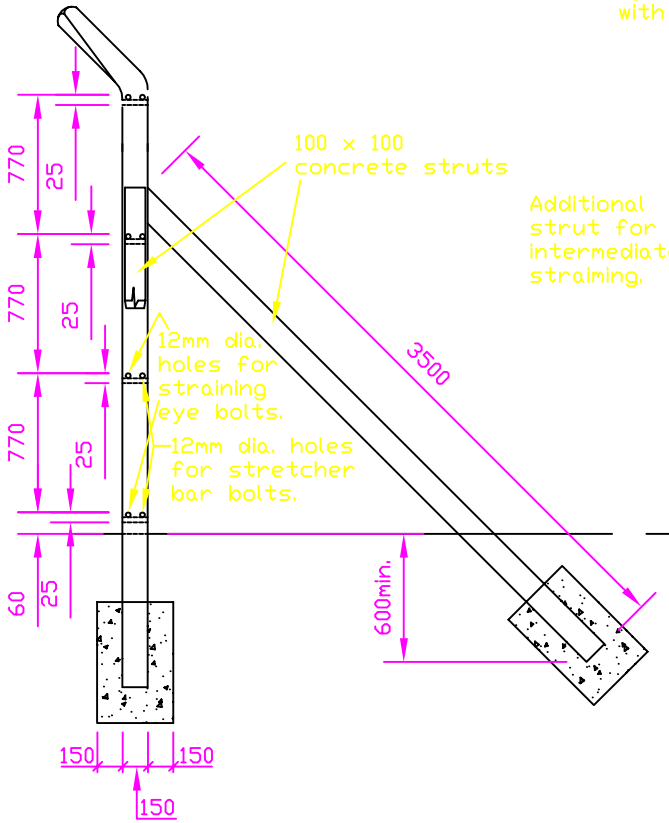

CORNER POST & STRUTS

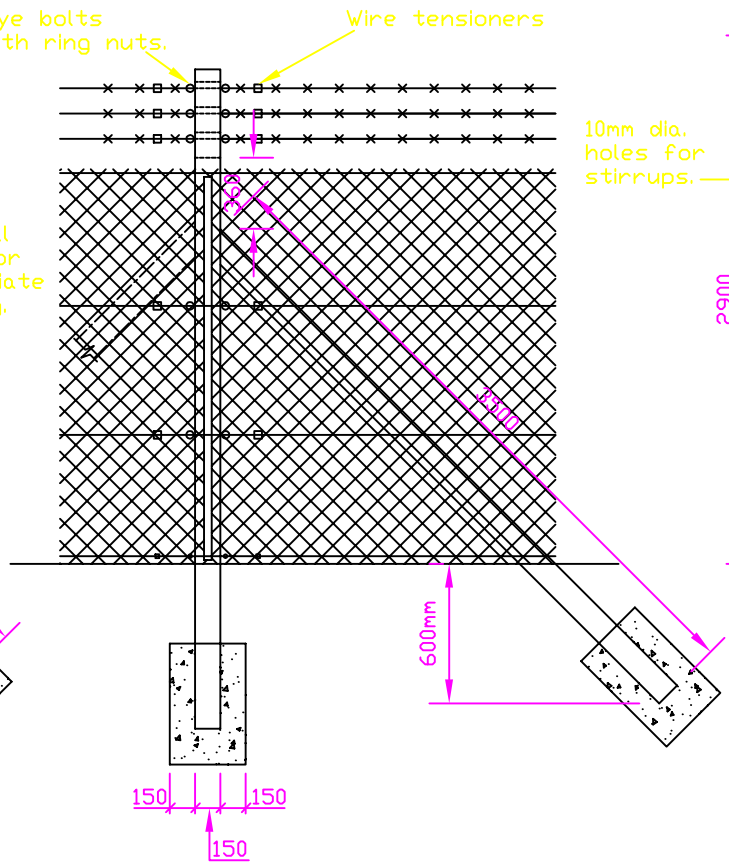

ELEVATION

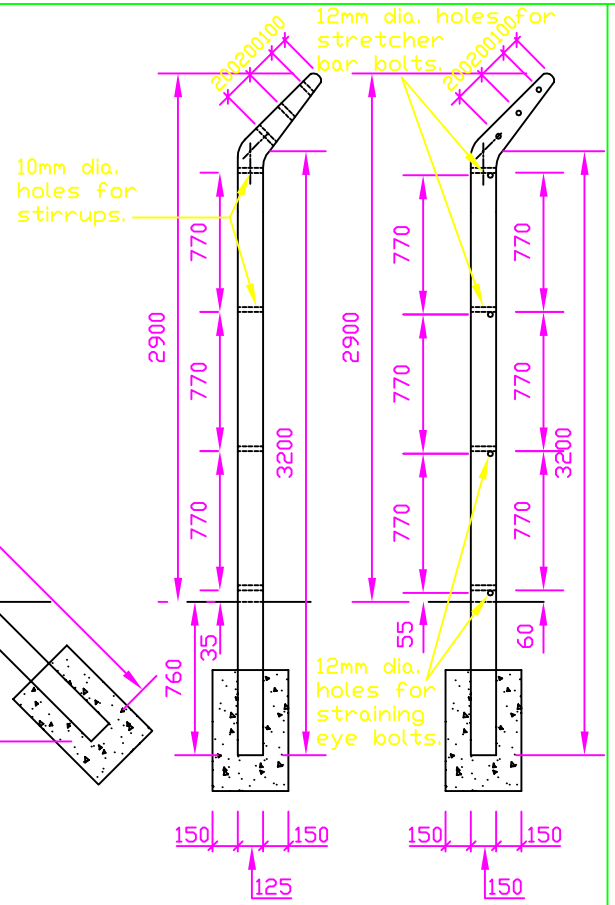

INTERMEDIATE POST

STRAINING POST

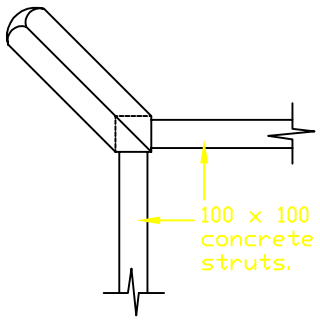

PLAN VIEW

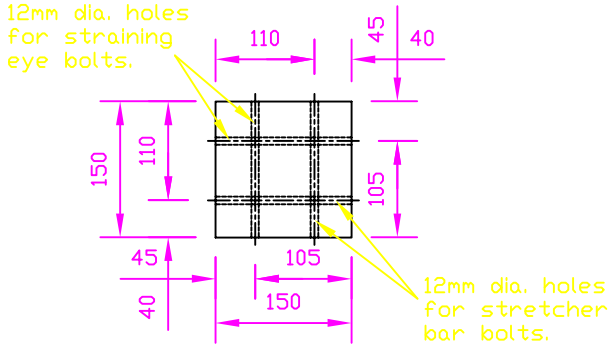

SECTION THROUGH CORNER POST

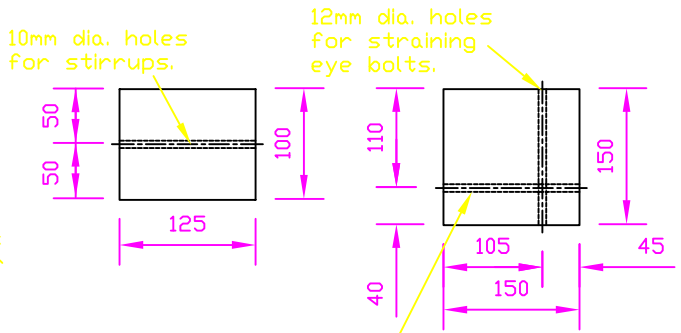

SECTIONS THROUGH POSTS

NOTES

1. All dimensions are in millimetres unless otherwise stated.
2. Top line wire to be 4mm galvanised wire.
3. Chain link fencing to be tied to top line wire at 150mm centres with 1.4mm galvanised tying wire and to remainder of line wires at 450mm centres.
4. Wire to be 3.50mm dia galvanised wire of 50mm diamond mesh.

No.	Date	Description
		AMENDMENTS

HIGHWAY CONSTRUCTION DETAILS

FENCES, STYLES AND GATES

SECURITY FENCING

Drawing No.

H74